STATE OF CALIFORNIA
DEPARTMENT OF PARKS AND RECREATION

LAND AND WATER CONSERVATION FUND PROGRAM

PROCEDURAL GUIDE
PART 3: DEVELOPMENT PROCEDURES

REVISED MARCH 1993

State of California
Department of Parks and Recreation
California Park Service

LAND AND WATER CONSERVATION FUND PROGRAM

PROCEDURAL GUIDE
Part III

DEVELOPMENT PROCEDURES

State of California-The Resources Agency
DEPARTMENT OF PARKS AND RECREATION
Local Services Section
P. O. BOX 942896
Sacramento, California 94296-0001

Telephone (916) 653-7423

Revised March 1993

TABLE OF CONTENTS

Table of Contents, cont.

I. INTRODUCTION

The Land and Water Conservation Fund (LWCF) program is administered by the Local Service Section of the California Department of Parks and Recreation. The Section ensures that the funds are spent in a manner consistent with state and federal law. It also ensures that development projects provide safe, accessible recreation facilities at a reasonable cost. Projects developed under the LWCF program must be developed in accordance with the federal and state laws and guidelines listed in this document. Laws affecting development by public agencies frequently change. It is your responsibility to be aware of all current laws, and to conform to them.

When federal funds are involved in a state project, federal standards must be followed in addition to the state standards. When federal and state standards differ, the stricter requirement prevails.

The state will, with the consent of the National Park Service and the U.S. Department of Labor, impose such contract sanctions as it may determine to be appropriate in the event of the participant's or contractor's failure to comply with the provisions of the contract. This may include one or all of the following actions:

1) Cancellation, termination, or suspension, in whole or in part, of the grant.

2) Refraining from extending any further assistance to the project sponsor until satisfactory assurance of future compliance has been received.

3) Referring the case to the Department of Justice for appropriate action.

II. DEFINITIONS

Bid Package: All bid and contract documents, plans, and technical specifications.

Bidder: Any individual, firm, partnership, or corporation submitting a proposal for the work contemplated, acting directly or through a duly authorized representative.

Contractor: The party of the second part, or his duly authorized agent, entering into contract with the applicant for performance of the work described by plans and specifications.

Department: California Department of Parks and Recreation.

Force Account: Construction using the applicant's own work force, volunteer labor, the California Conservation Corp, convict labor, or, in some cases, individuals paid on a time and material basis.

Force Account Schedule:

A narrative description of work to be accomplished by some means other than formal contract. It includes plans, drawings, or sketches as necessary, a clear description of the work, the reason for the work, how it is to be done, when, where, by whom, and at what cost.

Notice of Completion and Acceptance of Work for Each Contract:

A formal, written statement filed by the applicant at the completion of the contract which states that the work has been completed and is acceptable to the applicant. (The form is provided by the applicant.)

Participant: The state agency or local government recipient of a LWCF grant.

Plans: The detail drawings or exact reproductions which show location, character, layout, dimensions, and details of the work to be constructed under the contract.

Prevailing Wage: Minimum wage rates that must be paid for certain types of work as established by State Labor Code, Part 7, Chapter 1, Article 2, Sections 1770 through 1773.

Technical Specifications:

The specific, technical descriptions of the quality, nature, and function of materials, and the methods of construction, including workmanship and construction standards.

III. DEVELOPMENT PROCEDURES

State approval of your bid package or force account schedule is required. You should submit the appropriate documents before bidding a contract or starting work on the project.

PARTICIPANT'S RESPONSIBILITY

The following information lists the local government or state agency responsibility to comply with federal requirements in development of the project.

A. Projects Constructed Under Contract

* Federal law does not require bids for projects of less than $10,000.
* It is the participant's responsibility to notify the contractors of the program and reporting requirements.
* The participant must take action to ensure that the contractors comply with all regulations.

1. Prior to bidding a contract, the following requirements apply.

   a. All bid packages of $10,000 or more must include:

      (1) All of the usual bid and contract documents, plans, and technical specifications.

      (2) A location map with the address of the work site, including the name of the city or area.

      (3) The name of the project, the name of the awarding body, and a brief description of the work.

      (4) The LWCF Project number and a statement that federal funds are involved in the project.

      (5) General contract provisions as follows:

         a. The contract must be awarded by competitive bid.

         b. All change orders must be filed in writing.

         c. All applicable federal, state, and local laws must be complied with.

         d. There must be legal remedies for breach of contract.

e. There must be provisions for ending the contract as a result of default by the contractor.

f. There must be provisions for ending the contract for reasons beyond the control of the contractor, such as emergency or natural disaster.

g. A bid guarantee is required from each bidder equivalent to at least ten percent of the bid.

h. A state required performance bond of not less than 50%.

i. A state required payment bond of not less than 50%.

(6) Affirmative Action provisions as follows:

a. A copy of the Notice of Requirement for Affirmative Action to Ensure Equal Employment Opportunity, or equivalent. This involves goals for minorities and women. **See Attachment A.**

b. A copy of the Equal Employment Opportunity Clause. **See Attachment B.**

c. A copy of the Federal Contruction Contract Specifications. **See Attachment C.**

(7) The following reporting forms:

a. Form DPR 541, Notice of Contract Award. **See Attachment D, page 41.**

b. Form DPR 542, Certification of Non-Segregated Facilities, or equivalent. **See Attachment D, page 45.**

c. Form CC 257, Monthly Employment Utilization Report. **See Attachment D, page 49.**

d. Form DPR 544, Contractor's Notification of Sub-Contracts Awarded, or equivalent. **See Attachment D, page 53.**

e. Form DPR 547, Contractor's List of Federal and Non-Federal Work in Bid Condition Area. **See Attachment D, page 57.**

b. Contracts of $100,000 or more must **also** include the following:

(1) A requirement for a performance bond of not less than 100%.

(2) A requirement for a payment (labor & materials) bond of not less than 100%.

(3) A provision requiring compliance with the Copeland "Anti-Kickback" Act (18 U.S.C. 874, as supplemented by Department of Labor regulations (29 CFR, Part 3).

c. Contracts of $500,000 or more must **also** include instructions, reporting requirements, and a copy of Standard form 334, MBE/WBE. See **Attachment D, page 61.**

2. After approval of a bid package by the state and before awarding a contract for $10,000 or more, the participant will review and approve all of the equal employment opportunities materials from the successful bidder, and inform the bidder of where to submit those forms.

3. After awarding a contract of $10,000 or more, the participant will complete DPR Form 541, Notice of Contract Award, see **Attachment E, page 71**, and send it to the appropriate **Area Office of the Office of Federal Contract Compliance Programs (OFCCP), see Attachment E.**

4. During construction:

a) EEO posters must be displayed on all federally assisted construction sites.

b) A temporary acknowledgement sign must be displayed if the development cost is over $500,000. The signs shall be no less than two by three feet, readily visible, and include the amount of LWCF funds involved. They must also acknowledge both the National Park Service and the California Department of Parks and Recreation.

5. After the construction is complete, the following actions are required:

a. A permanent LWCF Program acknowledgement sign must be displayed on the site. The sign will be provided by the state, along with instructions for installation.

b. All required affirmative action reports must be submitted to the Department of Labor, OFCCP, before final payment is made to the contractor.

c. The participant will submit to this department one copy of the Notice of Completion of Contract and Acceptance of Work, along with a statement that the final payment has been made to the contractor.

d. Please refer to the "Procedural Guide for Land and Water Conservation Fund Program Part 2. Fiscal Procedures" for additional information on closing your project.

B. Projects Constructed By Force Account

Remember that the engineer from the state who reviews your plans and specifications has not seen the project site, and is not familiar with the project. Your plans, narrative descriptions, and facility/materials cost estimate are known collectively as a Force Account Schedule. The schedule should be written in a way that the project could be built from those instructions. You need to include information about what, how many, where, and how the work is to be done. We need to understand how the project will be built, and the steps you intend to take to accomplish the work.

The participant must insure that the provisions of the "Equal Opportunity Clause" are followed for construction contracts involving force account labor.

1. Criteria For Review Of The Force Account Schedule

Prior to preparing a force account schedule, you should consult your legal counsel to determine when you may use the force account approach. The criteria that we will use in evaluating your force account schedule are:

a. Have the steps for project development been well thought out?

b. Has visitor safety been considered throughout?

c. Is the work being done legally? Special attention will be given to disabled access to restrooms, structures, walkways, and other facilities. A construction plan or schematic must be submitted along with a step-by-step description of the work process.

2. What to submit. **See Attachment F, Sample Force Account Schedule.**

a. Transmittal letter - include the following:

1.) Project name and number.

2.) An explanation of why your agency does not have to bid the project.

3.) A general discussion of what you propose to do. Include a list of construction items in priority order, with a brief description and statement of the need for each item.

4.) The time frame for completion.

5.) An explanation of who is doing the work, how it will be done, and the name of the agency supervising and inspecting the work.

6.) Indicate who the authorizing body is (city council, board of supervisors, etc.).

b. Construction Information - Indicate which items are included in the project to be funded by this grant. Provide a step-by-step narrative on how each element of the project will be developed. The elements should correspond with those on the priority list.

c. Cost Estimate - include each major item.

d. Project Plan or Schematic - Submit building plans, including a location map and site plan or schematic with enough detail to show how the project is to be built. If structures are included, provide elevation views and at least one cross-section, along with floor and foundation plans. The plan must be drawn to scale, and include a signature and date block.

CONTRACTOR'S RESPONSIBILITY

The following information lists the contractor's responsibility when constructing a project that receives federal funding.

A. Meet the goals and timetables for female and minority participation, which is expressed in percentage of the work force in each trade on all construction contracts in excess of $10,000. **See Attachment A, Goals and Timetables for Women and Minorities.**

B. Abide by the provisions of the following, and insure that they are incorporated into all subcontracts:

1) "Equal Opportunity Clause".

2) "Notice of Requirement for Affirmative Action to Ensure Equal Employment Opportunity".

3) "Standard Federal Equal Employment Opportunity Construction Contract Specification".

C. Provide data and reports to OFCCP as required:

1) One-time notification within 10 days of all construction projects in the designated geographic area, federal and nonfederal, by agency, contract number, location, estimated dollar value, percent completed, and project completion date.

2) Notification of any subsequent construction work in excess of $10,000 (federal and non-federal) in the designated geographic area.

3) Workforce Utilization Report, to be filed monthly (form CC-257).

D. Maintain non-segregated facilities.

E. Include a signed "Certification of Non-Segregated Facilities" in contracts and require subcontractors to include a signed "Certification of Non-Segregated Facilities. **See Attachment D, page 45, form DPR 542.**

F. Expressly state in all employment solicitation or advertising that the contractor is an Equal Opportunity Employer.

G. Display the "Equal Opportunity Poster" at the work site.

H. Allow OFCCP personnel access to the site, records, and employees for the purpose of determining the contractor's compliance status.

I. Refrain from entering into contracts with contractors debarred from federal contracts or federally assisted construction contracts by the Secretary of Labor.

COMMON PROBLEMS

The areas of review where we most often encounter approval problems are discussed below.

1. Disabled Access Requirements

Disabled Access standards have changed frequently. The current state regulations are generally more strict than the requirements published by the American National Standards Institute, or than those found in the Uniform Building Code. The applicable state regulations are contained in Title 24 of the California Administrative Code.

The federal "Americans With Disabilities Act" requires that all new or rehabilitated facilities be accessible. There must be an accessible path of travel from the new or remodeled area and the restrooms, telephones, and drinking fountains that serve the area. Minor repairs such as replacing fixtures, rewiring, installing air conditioning, patching, replumbing, painting,

reroofing, or replacing floor coverings do not normally require additional access beyond that which exists, as long as no remodeling is done. Also, certain minor changes which improve disabled access can be done without requiring that other work be done, i.e., a building entrance can be made accessible, a toilet modified, railings modified, without other work being required.

Copies of the "Title 24, Disabled Access Regulations, Interpretive Manual" are available for a small fee from:

Office of the State Architect
Access Compliance Unit
1500 Fifth Street
Sacramento, CA 95814
(916) 445-6285

2. Structural Items

Plans for structural items must be signed by a registered civil or structural engineer, or by a licensed architect. The signature and license number of the person "in responsible charge" of the structural safety of the design must be on the drawing. A landscape architect, building designer, contractor, or other non-licensed individual may not sign for a stuctural item. Structural items generally include: all structural steel, masonry, or brick buildings and towers, most fences more than 6' high, all retaining walls more than 4' high, wood poles more than 30' high, buildings and towers more than 30' high, any wood frame building with a basement and more than 2 stories, and any wood structure with a clear span of more than 24'. (Children's play equipment, backstops, and chain link fences are generally not structural items.)

3. Prevailing Wage Rates On Projects more than $25,000.
(The federal Davis-Bacon Act does not apply to LWCF, but the state Prevailing Wage Law does apply)

Contractors must pay the prevailing wage rates as determined by the Labor Statistics and Research Division of the California Department of Industrial Relations. The general bid conditions must reflect the need to pay the prevailing wage rates (which are generally based on union contracts). The prevailing wage rates can be obtained from the Department of Industrial Relations. For a copy of the wage rates, write to:

Labor Statistics and Research,
P. O. Box 420603,
455 Golden Gate Avenue,
San Francisco, CA 94102.

4. Backflow Preventer

Health departments generally require backflow prevention devices on irrigation systems to prevent contamination of domestic water systems by poisons and fertilizer that might be drawn into the pipes through sprinkler heads. Backflow preventers are not required when the irrigation system is separate from the domestic water systems. (An example is where a local pond or treated sewage is used for irrigation water.)

5. Name Brands

When an item is specified by brand name rather than by technical description, California Government Code, Section 4380 requires that at least two brand names followed by "or equal" are identified in the specifications or plans. The only exceptions are when the applicant is matching an existing system, or where a unique item with no known equal is specified.

6. Miscellaneous

Check with your legal counsel to determine the bidding requirements that will be necessary. For "small" projects, simpler agreement forms and informal bid procedures may be allowed. A "small" contract is usually defined as being less than $10,000, depending on whether the applicant is a city, county, or special districts. However, some types of special districts have a limit as low as $500.

Plans and specifications should be clear and specific as to the work being done, including how, where, and how much. The simpler the system is, the fewer things can go wrong. Make the item tough to withstand vandalism. What you save on quality, you may pay in maintenance costs. For example, initial installation of an automatic irrigation system may be more cost-effective than later trying to convert a manual system.

For restroom facilities, split-face concrete block in tans or earth tones with good ventilation and lighting are less likely to be vandalized than a wooden structure or straight-faced gray block. Some prefabbed metal structures are fairly vandal-resistant, but not all meet current disabled standards. Skylights save energy and money.

For restroom design, refer to **Attachment G, pages 79-82.** The drawings and sketches are excerpts from, or clarifications of, the currently applicable state Handicapped Access Regulations. These regulations apply to all public buildings, and supersede local building codes.

AFFIRMATIVE ACTION SUMMARIES OF REPORTING AND LEGAL REQUIREMENTS

Laws governing affirmative action were established to prevent discrimination due to race, sex, religion, and disabilities. Federal laws preclude any agencies from receiving federal assistance if they discriminate. The purpose of this section is to provide a quick reference to assist LWCF program participants in identifying, understanding, and complying with these laws. Also please refer to "Participant's Responsibility" and "Contractor's Responsibility" in the body of this guide.

A. Summary Of Reporting Requirements

Item	Who Must File	With Whom
Prior to Formal Bid Award		
Form DPR 542: Certification of Non-Segregated Facilities	Construction contractor on contracts or subcontracts exceeding $10,000	Participating Local Agency
After Bid Award But Prior to Commencement of Work		
Form DPR 541: Notice of Contract Award	Participant after awarding a contract of $10,000 or more.	U.S. Dept. of Labor, Area Office of Federal Contract Compliance.
Form DPR 542: Contractor's Certification of Non-Segregated Facilities	Participating local agency	U. S. Dept. of Labor, Area Office of Federal Contract Compliance.
Form DPR 544: Contractor's Notification of Subcontracts Awarded.	Contractors (within 10 working days of any contruction contract in excess of $10,000)	U.S. Dept. of Labor, Area Office of Federal Contract Complicance.

Item	Who Must File	With Whom
During Construction		
Std. Form 334 Minority Business Enterprise (MBE) WBE Utilization	Recipients of federal grants or other federal assistance valued at $500,000 or more.	National Park Service Western Region Office
Form cc 257 Monthly Employment Utilization Report	Prime contractor and each of the sub-contractors.	U.S. Department of Labor Area Office of Federal Contract Compliance.
Form DPR 547 (Contractor's list of federal and non-federal work in bid condition areas)	Contractors	U.S. Department of Labor Area Office of Federal Contract Compliance.
All equal employment opportunity information	Additional contractors and subcontractors	Appropriate agencies, as above.
EEO Notice: "Equal Employment Is The Law"	Local participant agency	Post at project site in conspicuous place.

B. Summary of Key Legal Requirements

1. Civil Rights Act of 1964. Title VI

No person in the United States shall, on the grounds of race, color, or national origin, be excluded from participation in, be denied the benefits of or be subjected to discrimination under any program or activity receiving federal financial assistance. (Sec. 601)

(Sec. 602) Each federal department and agency which is empowered to extend federal financial assistance to any program or activity, by way of grant, loan or contract other than a contract of insurance or guarantee, is authorized and directed to effectuate the provisions of Section 601 with respect to such program or activity by issuing rules, regulations or orders of general applicability which shall be consistent with achievement of the objectives of the statute authorizing the financial assistance in connection with which the action is taken.

No such rule, regulation or order shall become effective unless and until approved by the President. Compliance with any requirement adopted pursuant to this section may be effected (1) by the termination of or refusal to grant or to continue assistance under such program or activity to any recipient as to whom there has been an express finding on the record, after opportunity for hearing, of a failure to comply with such requirement, but such termination or refusal shall be limited by the particular political entity, or part thereof, or other recipient as to whom such a finding has been so found, or (2) by any other means authorized by law; provided, however, that no such action shall be taken until the department or agency concerned has advised the appropriate person or persons of the failure to comply with the requirement and has determined that compliance cannot be secured by voluntary means. In the case of any action terminating, or refusing to grant or pursuant to the section, the head of the federal department or agency shall file with the committees of the House and Senate having legislative jurisdiction over the program or activity involved a full written report of the circumstances and the grounds for such action. No such action shall become effective until thirty days have elapsed after the filing of such report.

(Sec. 603.) Any department or agency action taken pursuant to Section 602 shall be subject to such judicial review as may otherwise be provided by law for similar action taken by such department or agency on other grounds. In the case of action, not otherwise subject to judicial review, terminating or refusing to grant or to continue financial assistance upon a finding of failure to comply with any requirement imposed pursuant to Section 602, any person aggrieved (including any state or political subdivision thereof and any agency of either) may obtain judicial review of such action in accordance with section 10 of the Administrative Procedure Act, and such action shall not be deemed committed to unreviewable agency discretion within the meaning of that section.

(Sec. 604) Nothing contained in this title shall be construed to authorize action under this title by any department or agency with agency or labor organization except where a primary objective of the federal financial assistance is to provide employment.

(Sec. 605) Nothing in this title shall add to or detract from any existing authority with respect to any program or activity under which federal financial assistance is extended by way of a contract of insurance of guarantee.

2. Section 504 of the Rehabilitation Act of 1973

Section 504 prohibits discrimination in employment on the basis of a disability. All participant and subparticipants (grantees, contractors, and subcontractors) have Section 504 responsibilities. Section 504 applies to each recipient of financial assistance from the Department of the Interior who funds or administers a park or recreation program.

Public and private organizations to whom subparticipants provide assistance are also covered by Section 504; such arrangements are interpreted by the Department as being extensions of federal financial assistance. Participants should study Department of the Interior Regulation 43 CFR 17.203 in its entirety for guidance on specific prohibitions related to services and benefits, based on the standard:

> No qualified disabled person shall, on the basis of disability, be excluded from participation in, be denied the benefits of, or otherwise be subjected to discrimination under any program or activity that receives or benefits from federal funds.

3. The Americans with Disabilities Act of 1990.

The Americans with Disabilities Act (ADA) gives civil rights protection to individuals with disabilities that are like those provided to individuals on the basis of race, sex, national origin, and religion. It guarantees equal opportunity for individuals with disabilities in employment, public accommodations, transportation, state and local government services, and telecommunications.

4. The Age Discrimination Act of 1975

Employment discrimination on the basis of age is prohibited on any project or activity which is a recipient of federal funds.

C. Executive Order 12432: Minority Business Enterprise Development

For any project involving $500,000 or more in grant assistance except for projects involving acquisition only (See Attachment C). The state or participant must submit, prior to commencement of construction and every fiscal quarter thereafter until project completion, reports (DI-334) documenting the efforts to hire minority business firms. These reports will be submitted to the National Park Service Regional Office in San Francisco, 600 Harrison St., Suite 600, San Francisco 94107-1372.

ATTACHMENT A

NOTICE OF REQUIREMENT FOR AFFIRMATIVE ACTION TO ENSURE EQUAL EMPLOYMENT OPPORTUNITY (GOALS FOR MINORITIES AND WOMEN)

ATTACHMENT A

NOTICE OF REQUIREMENT FOR AFFIRMATIVE ACTION TO ENSURE EQUAL EMPLOYMENT OPPORTUNITY(EXECUTIVE ORDER 11246)

I. Goal and Timetable for Women

On all federal or federally-assisted construction contracts in excess of $10,000, the goal for participation by women in each trade, until further notice, is 6.9%

II. Goals and Timetables for Minorities for the Covered Area

Until further notice, the following goals for minority utilization in each construction craft and trade shall be included in all federal or federally-assisted construction contracts and subcontracts in excess of $10,000 to be performed in the respective geographical areas.

Covered Areas	Goals (in %)	Covered Areas	Goals (in %)
Alameda	25.6	Orange	11.9
Alpine	19.8	Placer	16.1
Amador	19.8	Plumas	6.8
Butte	14.3	Riverside	19.0
Calaveras	19.8	Sacramento	16.1
Colusa	14.3	San Benito	23.2
Contra Costa	25.6	San Bernardino	19.0
Del Norte	6.6	San Diego	16.9
El Dorado	14.3	San Francisco	25.6
Fresno	26.1	San Joaquin	24.3
Glenn	14.3	San Luis Obispo	24.6
Humboldt	6.6	San Mateo	25.6
Imperial	18.2	Santa Barbara	19.7
Inyo	24.6	Santa Clara	19.6
Kern	19.1	Santa Cruz	14.9
Kings	23.6	Shasta	6.8
Lake	23.2	Sierra	14.3
Lassen	6.8	Siskiyou	6.8
Los Angeles	28.3	Solano	17.1
Madera	23.6	Sonoma	9.1
Marin	25.6	Stanislaus	12.3
Mariposa	19.8	Sutter	14.3
Mendocino	23.2	Tehama	6.8
Merced	19.8	Trinity	6.6
Modoc	6.8	Tulare	23.6
Mono	24.6	Tuolumne	19.8
Monterey	28.9	Ventura	21.5
Napa	17.1	Yolo	16.1
Nevada	14.3	Yuba	14.3

These goals are applicable to all the contractor's construction work (whether or not it is federal or federally assisted or a part of this contract) performed in the covered area.

If the contractor performs construction work in a geographical area located outside of the covered area, it shall apply the goals established for such geographical area where the work is actually performed. With regard to this second area, the contractor is also subject to the goals for both its federally involved and nonfederally involved construction.

The contractor's compliance with the Executive Order and the regulations in 41 CFR part 60-4 shall be based on its implementation of the Equal Opportunity Clause (attachment B), specific affirmative action obligations required by the specifications set forth in 41 CFR 60-4.3(a), and its efforts to meet the goals. The hours of minority and female employment and training must be substantially uniform throughout the length of the contract, and in each trade, and the contractor shall make a good-faith effort to employ minorities and women evenly on each of its projects. The transfer of minority or female employees or trainees from contractor to contractor or from project to project for the sole purpose of meeting the contractor's goals shall be violation of the contract, the Executive Order, and the regulations in 41 CFR Part 60-4. Compliance with the goals will be measured against the total work hours performed.

The contractor shall provide written notification to the director of the Office of Federal Contract Compliance Programs within ten working days of award of any construction subcontract in excess of $10,000 at any tier for construction work under the contract resulting from the solicitation. The notification shall list the name, address, and telephone number of the subcontractor; employer identification number of the subcontractor; estimated dollar amount of the subcontract; and the geographical area in which the subcontract is to be performed.

ATTACHMENT B

EEO CLAUSE

ATTACHMENT B

EQUAL EMPLOYMENT OPPORTUNITY CLAUSE

The applicant hereby agrees that it will incorporate or cause to be incorporated into any contract for construction work, or modification thereof, as defined in the regulations of the Secretary of Labor at 41 CFR Chapter 60, which is paid for in whole or in part with funds obtained from the Federal Government or borrowed on the credit of the Federal Government pursuant to a grant, contract, loan insurance, or guarantee, or undertaken pursuant to any Federal program involving such grant, contract, loan, insurance, or guarantee, the following equal opportunity clause.

During the performance of this contract, the contractor agrees as follows:

1. The contractor will not discriminate against any employee or applicant for employment because of race, color, religion, sex, or national origin. The contractor will take affirmative action to ensure the applicants are employed, and that employees are treated during employment without regard to their race, color, religion, sex, or national origin, such action shall include, but not be limited to the following: employment, upgrading, demotion, or transfer; recruitment or recruitment advertising; layoff or termination; rates of pay or other forms of compensation; and selection for training, including apprenticeship. The contractor agrees to post in conspicuous places, available to employees and applicants for employment, notices to be provided setting forth the provisions of this nondiscrimination clause.

2. The contractor will, in all solicitations or advertisements for employees placed by or on behalf of the contractor, state that all qualified applicant will receive considerations for employment without regard to race, color, religion, sex, or national origin.

3. The contractor will send to each labor union or representative of workers with which he has a collective bargaining agreement or other contract or understanding, a notice to be provided advising the said labor union or workers representatives of the contractor's commitments under this section, and shall post copies of the notice in conspicuous places available to employees and applicants for employment.

4. The contractor will comply with all provisions of Executive Order 11246 of September 24, 1965, and of the rules, regulations, and relevant orders of the Secretary of Labor.

5. The contractor will furnish all information and reports required by Executive Order 11246 of September 24, 1965, and by rules, regulations, and orders of the Secretary of Labor, or pursuant thereto, and will permit access to his books, records, and accounts by the administering agency

and the Secretary of Labor for purposes of investigation to ascertain compliance with such rules, regulations, and orders.

6. In the event of the contractor's noncompliance with the nondiscrimination clauses of this contract or with any of the said rules, regulations, or orders, this contract may be canceled, terminated, or suspended in whole or in part and the contractor may be declared ineligible for further Government contracts or federally assisted construction contracts in accordance with procedures authorized in Executive Order 11246 of September 24, 1965, and such other sanctions may be imposed and remedies invoked as provided in Executive Order 11246 of September 24, 1965, or by rule, regulation, or order of the Secretary of Labor, or as otherwise provided by law.

7. The contractor will include the portion of the sentence immediately preceding paragraph (1) and the provisions of paragraphs (1) through (7) in every subcontract or purchase order unless exempted by rules, regulations, or orders of the Secretary of Labor issued pursuant to section 204 of Executive Order 11246 of September 24, 1965, so that such provisions will be binding upon each subcontractor or vendor. The contractor will take such action with respect to any subcontract or purchase order as the administering agency may direct as a means of enforcing such provisions, including sanctions for noncompliance; provided, however, that in the event a contractor becomes involved in, or is threatened with, litigation with a subcontractor or vendor as a result of such direction by the administering agency the contractor may request the United States to enter into such litigation to protect the interests of the United States.

The applicant further agrees that it will be bound by the above equal opportunity clause with respect to its own employment practices when it participates in federally assisted construction work; provided, that if the applicant so participating is a State or local government, the above equal opportunity clause is not applicable to any agency, instrumentality or subdivision of such government which does not participate in work on or under the contract.

The applicant agrees that it will assist and cooperate actively with the administering agency and the Secretary of Labor in obtaining the compliance of contractors and subcontractors with the equal opportunity clause and the rules, regulations, and relevant orders of the Secretary of Labor, that it will furnish the administering agency and the Secretary of Labor such information as they may require for the supervision of such compliance, and that it will otherwise assist the administering agency in the discharge of the agency's primary responsibility for securing compliance.

The applicant further agrees that it will refrain from entering into any contract or contract modification subject to Executive Order 11246 of September 24, 1965, with a contractor debarred from, or who has not demonstrated eligibility for, Government contracts and federally assisted construction contracts pursuant to the Executive Order and will carry out such sanctions and penalties for violation of the equal opportunity clause as may be imposed upon contractors and subcontractors by the administering agency or the Secretary of Labor pursuant to Part II, Subpart D of the Executive Order. In addition, the applicant agrees that if it fails or refuses to comply with these undertakings, the administering agency may take any or all of the following actions: cancel, terminate, or suspend in whole or in part this grant contract, loan, insurance, guarantee; refrain from extending any further assistance to the applicant under the program with respect to which the failure or refund occurred until satisfactory assurance of future compliance has been received from such applicant; and refer the case to the Department of Justice for appropriate legal proceedings.

ATTACHMENT C

CONSTRUCTION CONTRACT SPECIFICATIONS

ATTACHMENT C

STANDARD FEDERAL EQUAL EMPLOYMENT OPPORTUNITY CONSTRUCTION CONTRACT SPECIFICATIONS

(EXECUTIVE ORDER 11246)

1. As used in these specification:

   A. "Covered area" means the geographic area described in the solicitation from which this resulted.

   B. "Director" means Director, Office of Federal Contract Compliance Programs, United States Department of Labor, or any person to whom the Director delegates authority.

   C. "Employer identification number" means the Federal Social Security number used on the Employer's Quarterly Federal Tax Return, U.S. Treasury Department Form 941.

   D. "Minority" includes:

      (i) Black (all persons having origins in any of the Black African racial groups not of Hispanic origin);

      (ii) Hispanic (all persons of Mexican, Puerto Rican, Cuban, Central or South American or other Spanish Culture or origin, regardless of race);

      (iii) Asian and Pacific Islander (all persons having origins in any of the original peoples of the Far East, Southeast Asia, the Indian Subcontinent, or the Pacific Islands); and

      (iv) American Indian or Alaskan Native (all persons having origins in any of the original peoples of North America and maintaining identifiable tribal affiliations through membership and participation or community identification).

2. Whenever the Contractor, or any Subcontractor at any tier, subcontracts a portion of the work involving any construction trade, it shall physically include in each subcontract in excess of $10,000 the provisions of these specifications and the Notice which contains the applicable goals for minority and female participation and which is set forth in the solicitations from which the contract resulted.

Manual Release 151
Replaces all preceding manual releases

3. If the Contractor is participating (pursuant to 41 CFR 60-4.5) in a Hometown Plan approved by the U.S. Department of Labor in the covered area either individually or through an association, its affirmative action obligations on all work in the Plan Area (including goals and timetables) shall be in accordance with that Plan for those trades which have unions participating in the Plan. Contractors must be able to demonstrate their participation in and compliance with the provisions of any such Hometown Plan. Each Contractor or Subcontractor participating in an approved Plan is individually required to comply with its obligations under the EEO clause, and to make a good faith effort to achieve each goal under the Plan in each trade in which it has employees. The overall good faith performance by other Contractors or Subcontractors toward a goal in an approved Plan does not excuse any covered Contractor's or Subcontractor's failure to take good faith efforts to achieve the Plan goals and timetables.

4. The Contractor shall implement the specific affirmative action standards provided in paragraphs 7 A through P of this Attachment. The goals set forth in the solicitation from which this contract resulted are expressed as percentages of the total hours of employment and training of minority and female utilization trade in which it has employees in the covered area. The Contractor is expected to make substantially uniform progress toward its goals in each craft during the period specified.

5. Neither the provisions of any collective bargaining agreement, nor the failure by a union with whom the Contractor has a collective bargaining agreement, to refer either minorities or women shall excuse the Contractor's obligations under these specifications, Executive Order 11246, or the regulation promulgated pursuant thereto.

6. In order for the nonworking training hours of apprentices and trainees to be counted in meeting the goals, such apprentices and trainees must be employed by the Contractor during the training period, and the Contractor must have made a commitment to employ the apprentices and trainees at the completion of their training, subject to the availability of employment opportunities. Trainees must be trained pursuant to training programs approved by the U.S. Department of Labor.

7. The Contractor shall take specific affirmative actions to ensure equal employment opportunity. The evaluation of the Contractor's compliance with these specifications shall be based upon its effort to achieve maximum results from its actions. The Contractor shall document these efforts fully, and shall implement affirmative action steps at least as extensive as the following:

   A. Ensure and maintain a working environment free of harassment, intimidation, and coercion at all sites, and in all facilities at which

the Contractor's employees are assigned to work. The Contractor, where possible, will assign two or more women to each construction project. The Contractor shall specifically ensure that all foremen, superintendents, and other on-site supervisory personnel are aware of and carry out the Contractor's obligation to maintain such a working environment, with specific attention to minority or female individuals working at such sites or in such facilities.

B. Establish and maintain a current list of minority and female recruitment sources, provide written notification to minority and female recruitment sources and to community organizations when the Contractor or its union have employment opportunities available, and maintain a record of the organization's responses.

C. Maintain a current file of the names, addresses and telephone numbers of each minority and female off-the-street applicant and minority or female referral from a union, a recruitment source or community organization and of what action was taken with respect to each such individual. If such individual was sent to the union hiring hall for referral and was not referred back to the Contractor by the union, or if referred, not employed by the Contractor, this shall be documented in the file with the reason therefore, along with whatever additional actions the Contractor may have taken.

D. Provide immediate written notification to the Director when the union or unions with which the Contractor has a collective bargaining agreement has not referred to the Contractor a minority person or woman sent by the Contractor, or when the Contractor has other information that the union referral process has impeded the Contractor's efforts to meet its obligations.

E. Develop on-the-job training opportunities and/or participate in training programs for the area which expressly include minorities and women, including upgrading programs and apprenticeship and trainee programs relevant to the Contractor's employment needs, especially those programs funded or approved by the Department of Labor. The Contractor shall provide notice of these programs to the sources compiled under 7B above.

F. Disseminate the Contractor's EEO policy by providing notice of the policy to unions and training programs and requesting their cooperation in assisting the Contractor in meeting its EEO obligations; by including it in any policy manual and collective bargaining agreement; by publicizing it in the company newspaper; annual report, etc.; by specific review of the policy with all management personnel and with all minority and female

employees at least once a year; and by posting the company EEO policy on bulletin boards accessible to all employees at each location where construction work is performed.

G. Review, at least annually, the company's EEO policy and affirmative action obligations under these specifications with all employees having any responsibility for hiring, assignment, layoff, termination or other employment decisions including specific review of these items with onsite supervisory personnel such as superintendents, general foremen, etc., prior to the initiation of construction work at any job site. A written record shall be made and maintained identifying the time and place of these meetings, persons attending, subject matter discussed, and disposition of the subject matter.

H. Disseminate the Contractor's EEO policy externally by including it in any advertising in the news media, specifically including minority and female news media, and providing written notification to and discussing the Contractor's EEO policy with other Contractors and subcontractors with whom the Contractor does or anticipates doing business.

I. Direct its recruitment efforts, both oral and written, to minority, female and community organizations, to schools with minority and female students and to minority and female recruitment and training organizations serving the Contractor's recruitment area and employment needs. Not later than one month prior to the date for the acceptance of applications for apprenticeship or other training by any recruitment sources, the Contractor shall send written notification to organizations such as the above, describing the openings, screening procedures, and tests to be used in the selection process.

J. Encourage present minority and female employees to recruit other minority persons and women and, where reasonable, provide after school, summer and vacation employment to minority and female youth both on the site and in other areas of a Contractor's workforce.

K. Validate all tests and other selection requirements where here is an obligation to do so under 41 CFR Part 60-3.

L. Conduct, at least annually, an inventory and evaluation at least of all minority and female personnel for promotional opportunities and encourage these employees to seek or to prepare for, through appropriate training, etc., such opportunities.

M. Ensure that seniority practices, job classifications, work assignments and other personnel practices, do not have a discriminatory effect by continually monitoring all personnel and employment related activities to ensure that the EEO policy and the Contractor's obligations under these specifications are being carried out.

N. Ensure that all facilities and company activities are nonsegregated except that separate or single-user toilet and necessary changing facilities shall be provided to assure privacy between the sexes.

O. Document and maintain a record of all solicitations of offers for subcontracts from minority and female construction contractors and suppliers, including circulation of solicitations to minority and female contractor associations and other business associations.

P. Conduct a review, at least annually, of all supervisors' adherence to and performance under the Contractor's EEO policies and affirmative action obligations.

8. Contractors are encouraged to participate in voluntary associations which assist in fulfilling one or more of the affirmative action obligations (7A through P). The efforts of a contractor association, joint contractor-union, contractor-community, or other similar group of which the contractor is a member and participant, may be asserted as fulfilling any one or more of its obligations under 7A through P of these specifications provided that the contractor actively participates in the group, makes every effort to assure that the group has a positive impact on the employment of minorities and women in the industry, ensures that the concrete benefits of the program are reflected in the Contractor's minority and female workforce participation, makes a good faith effort to meet its individual goals and timetables, and can provide access to documentation which demonstrates the effectiveness of actions taken on behalf of the Contractor. The obligation to comply, however, is the Contractor's and failure of such a group to fulfill an obligation shall not be a defense for the Contractor's noncompliance.

9. A single goal for minorities and a separate single goal for women have been established. The Contractor, however, is required to provide equal employment opportunity and to take affirmative action for all minority groups, both male and female, and all women, both minority and non-minority. Consequently, the Contractor may be in violation of the Executive Order if a particular group is employed in substantially disparate manner (for example, even though the Contractor has achieved its goals for women generally, the Contractor maybe in violation of the Executive Order if a specific minority group of women is underutilized).

- -

10. The Contractor shall not use the goals and timetables of affirmative action standards to discriminate against any person because of race, color, religion, sex, or national origin.

11. The Contractor shall not enter into any subcontract with any person or firm debarred from government contracts pursuant to Executive Order 11246.

12. The Contractor shall carry out such sanctions and penalties for violation of these specifications and of the Equal Opportunity Clause, including suspension, termination and cancellation of existing subcontracts as may be imposed or ordered pursuant to Executive Order 11246, as amended, and its implementing regulations, by the Office of Federal Contract Compliance Programs. Any Contractor who fails to carry out such sanctions and penalties shall be in violation of these specifications and Executive Order 11246, as amended.

13. The Contractor, in fulfilling its obligations under these specifications, shall implement specific affirmative action steps, at least as extensive as those standards prescribed in paragraph 7 of this Attachment, so as to achieve maximum results from its efforts to ensure equal employment opportunity. If the Contractor fails to comply with the requirements of the Executive Order, the implementing regulations, or these specifications, the Director shall proceed in accordance with 41 CFR 60-4.8.

14. The Contractor shall designate a responsible official to monitor all employment related activity to ensure that the company EEO policy is being carried out, to submit reports relating to the provisions hereof as may be required by the Government and keep records. Records shall at least include for each employee the name, address, telephone numbers, construction trade, union affiliation if any, employee identification number when assigned, social security number, race, sex, status (e.g., mechanic, apprentice, trainee, helper, or laborer), dates of changes in status, hours worked per week in the indicated trade, rate of pay, and locations at which the work was performed. Records shall be maintained in an easily understandable and retrievable form; however, to the degree that existing records satisfy this requirement, contractors shall not be required to maintain separate records.

15. Nothing herein provided shall be construed as a limitation upon the application of other laws which establish different standards of compliance or upon the application of requirements for hiring of local or other area residents (e.g., those under the Public Works Employment Act of 1977 and the Community Development Block Grant Program).

ATTACHMENT D

FORMS:
DPR 541; DPR 542; CC 257; DPR 544; DPR 447; STANDARD FORM 334

FORM DPR 541

State of California — The Resources Agency
DEPARTMENT OF PARKS AND RECREATION

NOTICE OF CONTRACT AWARD
Federally Assisted Projects

Participant (local agency) _____

Project Name _____

_____ Project Number _____

Prime Contractor _____

Address _____

_____ Phone Number ( ) _____

Location Where Work to be Performed and County _____

_____

_____ Amount of Contract _____

Estimated Date Work to Start _____ Estimated Date of Completion _____

1. Has contractor held prior federal or federally assisted contracts during the last two years?

   ☐ YES If yes, answer a. through d.
   ☐ NO If no, skip to Item No. 2.

   (Attach extra sheet if additional space is needed.)

   a. Federal Agency or Grant Program _____

   b. Type of Work _____

   c. Location of Work _____

   d. Amount of Contract _____

2. Has contractor been reviewed by federal, state, or local agency pursuant to Executive Order 11246 as amended, within the past two years?
   ☐ YES ☐ NO If yes, by what agency? _____

3. Indicate names, addresses, phone numbers, trades and dollar amounts of identified subcontractors (Attach extra sheet if additional space is needed.)

   _____
   _____
   _____
   _____
   _____
   _____
   _____

4. Have any subcontractors held prior federal or federally assisted contracts during the last two years?

   ☐ YES If yes, answer a. through e.
   ☐ NO If no, skip to Item No. 5.

DPR 541 (Rev. 2/93) (Front)

(Attach extra sheet if additional space is needed.)

a. Subcontractor _____

b. Federal Agency or Grant Program _____

c. Type of Work _____

d. Location of Work _____

d. Amount of Contract _____

5. Is the construction site covered by hometown special bid conditions?

☐ YES If yes, answer a. through c.
☐ NO

a. Is the contractor signatory to the plan? ☐ YES ☐ NO

b. List any identified subcontractors signatory to the plan (Attach extra sheet if additional space is needed).

_____

c. List the trades covered by the requirements (Attach extra sheet if additional space is needed).

_____

Prepared by: (Signature and Title of Contractor's Representative) (E.E.O. Officer)	Date
Prepared by: (Signature and Title of Local Agency Representative)	Date

FORM DPR 542

State of California — The Resources Agency
DEPARTMENT OF PARKS AND RECREATION

CERTIFICATION OF NON-SEGREGATED FACILITIES
Federally Assisted Projects

The federally assisted construction contractor certifies that he does not maintain or provide for his employees any segregated facilities at any of his establishments, and that he does not permit his employees to perform their services at any location, under his control, where segregated facilities are maintained. The federally assisted construction contractor certifies further that he will not maintain or provide for his employees any segregated facilities at any of his establishments, and that he will not permit his employees to perform their services at any location, under his control, where segregated facilities are maintained. The federally assisted construction contractor agrees that a breach of this certification is a violation of the Equal Opportunity clause in this contract. As used in this certification, the term "segregated facilities" means any waiting rooms, work areas, restrooms and washrooms, restaurants and other eating areas, timeclocks, locker rooms and other storage or dressing areas, parking lots, drinking fountains, recreation or entertainment areas, transportation, and housing facilities provided for employees which are segregated by explicit directive or are in fact segregated on the basis of race, creed, color, or national origin, because of habit, local custom, or otherwise. The federally assisted construction contractor agrees that (except where he has obtained identical certifications from proposed subcontractors for specific time periods) he will obtain identical certifications from proposed subcontractors prior to the award of subcontracts exceeding $10,000 which are not exempt from the provisions of the Equal Opportunity clause, and that he will retain such certifications in his files.

NOTE: The penalty for making false statements in offers is prescribed in 18 U.S.C. 1001.

Company: _____

Project No.: _____

By: _____

Title: _____

Date: _____

DPR 542 (Rev. 1/82)

FORM CC 257

Monthly Employment Utilization Report

U.S. Department of Labor
Employment Standards Administration
Office of Federal Contract Compliance Programs

his report is required by Executive Order 11246, Sec. 203. Failure to report can result in contracts eing cancelled, terminated or suspended in whole or in part and the contractor may be declared ineligible for further Government contracts of federally assisted construction contracts.

1. Covered Area (SMSA or EA)

2. Employers I.D. No.

OMB No. 1215-0163
Expires: 12/31/94

. Current Goals
inority ______
emale ______

4. Reporting Period
From ______
To ______

Name and Location of Contractor

Federal Funding Agency (List all)

.		**6. TOTAL FEDERAL & NON-FEDERAL CONSTRUCTION WORK HOURS**												9.		10.	
ONSTRUCTION TRADE	Classifications	6a. Total All Employees By Trade		6b. Black (Not of Hispanic Origin)		6c. Hispanic		6d. Asian or Pacific Islander		6e. American Indian or Alaskan Native		7. Minority Percentage	8. Female Percentage	Total Number of Employees		Total Number of Minority Employees	
		M	F	M	F	M	F	M	F	M	F			M	F	M	F
	Journey Worker																
	Apprentice																
	Trainee																
	Journey Worker																
	Apprentice																
	Trainee																
	Journey Worker																
	Apprentice																
	Trainee																
	Journey Worker																
	Apprentice																
	Trainee																
	Journey Worker																
	Apprentice																
	Trainee																
otal Journey Workers																	
otal Apprentices																	
otal Trainees																	
rand Total																	

. Company Official's Signature and Title

12. Telephone Number (Include area code)

13. Date Signed

Page ______ of ______

Form CC-257

INSTRUCTIONS FOR FILING MONTHLY EMPLOYMENT UTILIZATION REPORT (CC-257)

The Monthly Utilization Report is to be completed by each subject contractor (both prime and sub) and signed by a responsible official of the company. The reports are to be filed by the 5th day of each month during the term of the contract, and they shall include the total work-hours for each employee classification in each trade in the covered area for the monthly reporting period. The prime contractor shall submit a report for its aggregate work force. Each subcontractor shall separately submit a report for its aggregate work force. All reports shall be submitted to the OFCCP office in your area. (Additional copies of this form may be obtained from the U.S. Department of Labor, Employment Standards Administration, OFCCP's office for your area.)

Federal Funding Agency	U.S. Government agency funding project (in whole or in part). If more than one agency, list all.
Contractor	Any company which has a construction contract with the U.S. Government or a contract funded in whole or in part with Federal funds.
Minority	Includes Blacks, Hispanics, American Indians, Alaskan Natives, and Asian and Pacific Islanders—both men and women.
1. Covered Area	Geographic area identified in Notice required under 41 CFR 60-4.2.
2. Employer's Identification Number	Federal Social Security Number used on Employer's Quarterly Federal Tax Return (U.S. Treasury Department Form 941).
3. Current Goals (Minority & Female)	See contract Notification.
4. Reporting Period	Monthly, or as directed by OFCCP, beginning with the effective date of the contract.
5. Construction Trade	Only those construction crafts which contractor employs in the covered area.
6. Work-Hours of Employment (a-e)	a. The total number of male HOURS and the total number of female HOURS worked by employees in each classification. b.-e. The total number of male HOURS and the total number of female HOURS worked by each specified group of minority employees in each classification.
Classification	The level of accomplishment or status of the worker in the trade (Journey Worker, Apprentice, Trainee)
7. Minority Percentage	The percentage of total minority work-hours of all work-hours (the sum of columns 6b, 6c, 6d, and 6e divided by column 6a; just one figure for each construction trade).
8. Female Percentage	For each trade the number reported in 6a. F divided by the sum of the numbers reported in 6a. M and F.
9. Total Number of Employees	Total NUMBER of male and total NUMBER of female employees working in each classification of each trade in the contractor's aggregate work force during reporting period.
10. Total Number of Minority Employees	Total NUMBER of male minority employees and total NUMBER of female minority employees working in each classification in each trade in the contractor's aggregate work force during reporting period.

Public Burden Statement

We estimate that it will take an average of 60 minutes per response to complete this collection of information, including time for reviewing instructions, searching existing data sources, gathering and maintaining the data needed, and completing and reviewing the collection of information. If you have any comments regarding these estimates or any other aspect of this collection of information, including suggestions for reducing this burden, send them to the Office of IRM Policy, U.S. Department of Labor, Room N1301, 200 Constitution Avenue, N.W., Washington, D.C. 20210; and to the Office of Management and Budget, Paperwork Reduction Project (1215-0163), Washington, D.C. 20503.

DO NOT SEND THE COMPLETED SURVEY TO EITHER OF THESE OFFICES

FORM DPR 544

State of California — The Resources Agency
DEPARTMENT OF PARKS AND RECREATION

CONTRACTOR'S NOTIFICATION OF SUBCONTRACTS AWARDED

PROJECT TITLE _____ DATE _____

PROJECT NUMBER _____ GEOGRAPHICAL AREA _____

NAME OF PRIME CONTRACTOR _____

SUBCONTRACTOR'S NAME, ADDRESS, AND TELEPHONE NUMBER	EMPLOYER IDENTIFICATION NUMBER	CONTRACT AMOUNT	ESTIMATED DATES		CRAFTS TO BE USED
			STARTING	COMPLETION	

NOTE: INFORMATION TO BE PROVIDED BY THE PRIME CONTRACTOR WITHIN TEN (10) WORKING DAYS OF AWARD OF THE CONTRACT. WITH REFERENCE TO SUBCONTRACTORS, INFORMATION TO BE PROVIDED FOR ALL SUBCONTRACTS OVER $10,000 REGARDLESS OF TIER. ONE COPY EACH TO: OFCCP AREA OFFICE. (ATTACH EXTRA SHEETS IF ADDITIONAL SPACE IS NEEDED).

PR 544 (7/82)

FORM DPR 547

State of California The Resources Agency
DEPARTMENT OF PARKS AND RECREATION

CONTRACTOR'S LIST OF FEDERAL AND NON-FEDERAL WORK IN BID CONDITION AREAS

CONTRACTOR'S NAME _____ DATE _____

BID CONDITION AREA _____ PROJECT NUMBER _____

I. FEDERALLY ASSISTED CONTRACTS

NAME OF FEDERAL AGENCY FUNDING PROJECT	PROJECT NAME AND ADDRESS OF PROJECT SITE	PROJECT NUMBER	CONTRACT DOLLAR AMT	CONSTRUCTION START DATE	PER CENT COMPLETE	PROJECTED COMPLETIO

II. NON-FEDERAL CONTRACTS

CONTRACT WITH	PROJECT NAME AND ADDRESS OF PROJECT SITE	PROJECT NUMBER	CONTRACT DOLLAR AMT	CONSTRUCTION START DATE	PER CENT COMPLETE	PROJECTE COMPLETIC

NOTE: ATTACH TO THE INITIAL CC257 SUBMITTED. SUBMIT UPDATED NOTICE ONLY IF WORK IS COMPLETE OR NEW CONTRACTS HAVE BEEN RECEIVED. (ATTACH EXTRA SHEETS IF ADDITIONAL SPACE IS NEEDED.)

PR 547 (7/82)

STANDARD FORM 334

MBE/WBE* UTILIZATION UNDER FEDERAL GRANTS, COOPERATIVE AGREEMENT, AND OTHER FEDERAL FINANCIAL ASSISTANCE

PART 1. (NEGATIVE REPORTS MAY BE REQUIRED)

1A. FEDERAL FISCAL YEAR

19_____

1B. REPORTING QUARTER (Check appropriate box)

☐ 1st (Oct.-Dec.), ☐ 2nd (Jan.-Mar.), ☐ 3rd (Apr.-Jun.), ☐ 4th (Jul.-Sep.)

2. FEDERAL FINANCIAL ASSISTANCE AGENCY (Department/Agency, Bureau/Administering Office, Address)

3. REPORTING RECIPIENT (Name and Address)

2A. REPORTING CONTACT | PHONE:

3A. REPORTING CONTACT | PHONE:

4A. FINANCIAL ASSISTANCE AGREEMENT ID NUMBER

4B. FEDERAL FINANCIAL ASSISTANCE PROGRAM

4C. TYPE OF FEDERAL ASSISTANCE AGREEMENT

☐ GRANT ☐ COOPERATIVE AGREEMENT ☐ OTHER FEDERA FINANCIAL ASSISTANCE

5A. PERIOD WHEN PROCUREMENT UNDER THIS AWARD WILL OCCUR

START DATE: | END DATE:

5B. AMOUNT OF TOTAL PROJECT DOLLARS PLANNED FOR PROCUREMENT THIS FISCAL YEAR

$

5C. RECIPIENT'S MBE/WBE GOALS (Percent of total procurement dollars (5b) for each)

MBE % WBE %

5D. MBE/WBE PROCUREMENT ACCOMPLISHED THIS QUARTER

MBE $ WBE $

5E. NEGATIVE REPORT (Check)

☐ SEE INSTRUCTIONS

6. COMMENTS :

7 NAME OF AUTHORIZED REPRESENTATIVE | TITLE

8 SIGNATURE OF AUTHORIZED REPRESENTATIVE | DATE

*WBE reporting is optional at the direction of Federal financial assistance agency

STANDARD FORM 334
AUTHORIZED FOR LOCAL REPRODUCTION
Prescribed by DEPARTMENT OF COMMERCE

Manual Release 151
Replaces all preceding manual releases

MBE/WBE PROCUREMENTS OVER $10,000 MADE DURING REPORTING QUARTER

PART II.

Procurement Made By		Business Enterprise		$ Value of Procurement	Date of Award (MM/DD/YY)	Type of Product or Service[1] (Enter Code)	Name/Address of MBE/WBE Contgractor or Vendor[1]
Reciopient	Other	Minority	Women				

[1] Type of product of service codes:

1 = Agriculture
2 = Mining
3 = Construction
4 = Manufacturing
5 = Transportation
6 = Wholesale Trade
7 = Retail Trade
8 = Finance, Insurance, Real Estate
9 = Services
a = Business Services
b = Professional Services
c = Repair Services
d = Personal Services
10 = Other

INSTRUCTIONS

Manual Release 151
Replaces all preceding manual releases

Standard Form 334 Instructions
Minority Business Enterprise Development

1. General Instructions

Laws regarding minority business enterprises (MBE) and women business enterprises (WBE) were enacted to encourage greater economic opportunities for minority entrepreneurs. MBE/WBE utilization is based on Executive Orders 11625, 12138, and 12432, and OMB Circular A-102. Standard Form 334 must be completed by recipients of federal grants, cooperative agreements, or other federal financial assistance valued at $500,000 or more, and which involve procurement of supplies, equipment, construction, or services to accomplish federal assistance programs.

Recipients are required to report to agency award officials within one month following the end of each federal fiscal year quarter (i.e. January 31, April 30, July 31, and October 31) during which any procurement in excess of $10,000 is actually executed under this assistance agreement.

2. Definitions

Procurement is acquisition through order, purchase, lease or barter of supplies, equipment, construction or services needed to accomplish federal assistance programs.

A minority business enterprise (MBE) is a business concern that is (1) at least 51 percent owned by one or more minority individuals, or, in the case of a publicly owned business, at least 51 percent of the stock is owned by one or more minority individuals: and (2) whose daily business operations are managed and directed by one or more of the minority owners.

There is no standard definition of minority individuals used by all federal financial assistance agencies. However, recipients shall presume that minority individuals include Black Americans, Hispanic Americans, Native Americans, Asian Pacific Americans, or other groups whose members are found to be disadvantaged by the Small Business Act or by the Secretary of Commerce under section 5 of Executive Order 11625. The reporting contact at your federal financial assistance agency can provide additional information.

A woman business enterprise (WBE) is a business concern that is, (1) at least 51 percent owned by one or more women, or, in the case of a publicly owned business, at least 51 percent of the stock is owned by one or more women: and, (2) whose daily business operations are managed and directed by one or more of the women owners.

Business firms which are 51 percent owned by minorities or women, but are in fact managed and operated by any non-minority individuals do not qualify for meeting MBE/WBE procurement goals.

The following affirmative steps for using MBEs and WBEs are suggested:

a. Inclusion of MBEs/WBEs on solicitation lists.

b. Assure that MBEs/WBEs are solicited once they are identified.

c. Where feasible, divide total requirements into smaller tasks to permit maximum MBE/WBE participation.

d. Where feasible, establish delivery schedules which will encourage MBE/WBE participation.

e. Encourage use of the services of the U.S. Department of Commerce's Minority Business Development Agency (MBDA) and the U.S. Small Business Administration to identify MBEs/WBEs.

f. Require that each party to a subgrant, subagreement, or contract award take the affirmative steps outlined here.

3. Instructions for Part I

1. Complete federal fiscal year and check applicable reporting quarter. (Federal fiscal year runs from October 1 through September 30.)

2. Identify the federal financial assistance department or agency, including the bureau, office or other subactivity which administers your financial assistance agreement.

3. Identify the agency, state, authority, university, or other organization which is the recipient of the federal financial assistance, and the person to contact concerning this report.

4a. Assistance agreement number assigned by federal financial assistance agency.

4b. If appropriate, identify specific department or agency federal financial assistance program under which this project is awarded.

4c. Check type of federal assistance.

5a. Period during which contracts and other purchases under this award will actually be executed.

5b. Include the procurement using federal funds plus recipient matching funds and funds from other sources.

5c. Portion of total procurement dollars recipient plans to spend with MBEs or WBEs this fiscal year. With the concurrence of the federal financial assistance agency, a fair-share goal shall be determined by each recipient.

5d. Dollar amount of all MBE/WBE contracts awarded under this assistance agreement this quarter.

5e. Check only if one or more procurements in excess of $10,000 were executed this reporting quarter, but no MBE/WBE procurement occurred. Sign and date form and return it to federal financial assistance agency.

6. Additional comments or explanations. Please refer to specific item number(s) if appropriate.

7. Name and title of official administrator or designated reporting official.

8. Signature and month, day, year report submitted.

4. Instructions for Part II

For each MBE/WBE procurement over $10,000 made under this assistance agreement during the reporting quarter, provide the following information. (Recipients may also report on individual MBE/WBE procurement of less than $10,000 if they want these credited toward their MBE/WBE goals; however, reporting on smaller procurements is not required.)

1. Check whether this is a first-tier procurement made directly by federal financial assistance recipient or other second tier contractor. Include all qualifying second-tier purchases executed this quarter regardless of when the first-tier procurement occurred.

2. Check MBE or WBE.

3. Dollar value of procurement.

4. Date of award shown as month, day, year.

5. Using codes at the bottom of the form, identify type of product or service acquired through this procurement (e.g., enter 1 for agriculture, 2 if mining, etc.).

6. Name and address of MBE/WBE firm.

5. Reporting Requirements

When appropriate, a completed copy of OMB Form 334 is to be mailed to the National Park Service during the following three intervals:

a. Prior to commencement of project construction activities.

b. Within five days following the end of each quarter.

April 5 - for January, February, March
July 5 - for April, May, June
October 5 - for July, August, September
January 5 - for October, November, December

The completed OMB 334 forms should be mailed to:

George McGuffick
Planning, Grants, and Environmental Quality
Western Region Office
National Park Service
600 Harrison St., #600
San Francisco, CA 94107-1372
(415) 744-3972

ATTACHMENT E

AREA LOCATIONS OF THE OFFICE OF FEDERAL CONTRACT COMPLIANCE PROGRAMS (OFCCP)

ATTACHMENT E

AREA AND FIELD OFFICES OF FEDERAL CONTRACT COMPLIANCE

SAN FRANCISCO:	Area Director for OFCCP/ESA U.S. Department of Labor 211 Main Street, Suite 328 San Francisco, Ca. 94105 415-744-6630
VAN NUYS:	Area Director for OFCCP/ESA U.S. Department of Labor P.O. Box 518 6230 Van Nuys Blvd., Rm. 1-S-1 Van Nuys, Ca. 91408 818-904-6285
OAKLAND:	Area Director for OFCCP/ESA U.S. Department of Labor 1401 Lakeside Drive, Suite 702 Oakland, Ca. 94612 415-273-4055
LOS ANGELES:	Area Director for OFCCP/ESA U.S. Department of Labor 3660 Wilshire Blvd., Suite 602 Los Angeles, Ca. 94612 213-252-7542
SAN JOSE:	Area Director for OFCCP/ESA U.S. Department of Labor 280 S. First Street, Suite 390 San Jose, Ca. 95113 408-291-7384
SANTA ANA:	Field Director for OFCCP/ESA U.S. Department of Labor 34 Civic Center Plaza Santa Ana, Ca. 92712 714-836-2784

ATTACHMENT F

SAMPLE FORCE ACCOUNT

ATTACHMENT F

SAMPLE FORCE ACCOUNT SCHEDULE

Examples of a transmittal letter, construction information, cost estimate, and a project plan are shown on the following pages:

a. Sample Transmittal Letter

Project Officer (Name)
Local Assistance Section
Dept. of Parks & Recreation
P. O. Box 942896
Sacramento, CA 94296-0001

Dear

Mythical County Park Development
Grant Number 06-01399

Enclosed for your review is the force account information for the work we propose to do under this grant. We do not have to bid the project because the total project costs are below our bid minimums.

The order of priority for construction of the items under this grant is:

1. Rip rap the creek
2. Sidewalk on Main Street
3. Pave off-street parking
4. Complete fence along Main Street
5. New poured matting for the playground.

The $10,000 from the state grant is the only source of funds for this project. If the grant does not cover the work, we will postpone lower-priority items until we can raise the money from other sources.

Heavy winter storms of two years ago caused a lot of erosion on the creek bank, and left steep banks which are a hazard to the children who play in the area. We plan to slope the bank back to a 1:1 slope and put in heavy boulder rip rap to make the area safer and stop future erosion.

Installation of concrete sidewalks will eliminate the serious problem arising from tracking of mud and sand from the present gravel walks into the museum. In addition, concrete walks will present a much neater appearance and enhance disabled access.

Paving of the parking lot will eliminate maintenance of the graveled area - now compounded by youngsters on motorcycles and in cars.

The existing split rail fence only goes halfway across the front of the property. Finishing the fence will give the park a better appearance, and enhance security.

The sand in the playground is getting thin, as the children just naturally scatter it around, and it is not disabled accessible. Poured matting by Perot Petroleum Industries will provide disabled access, and help prevent injuries.

We expect that the bulk of the improvements planned will be accomplished by force account during 1998 under the supervision of the Timberline County Parks Department, as agent of the Timberline County Board of Supervisors.

Please advise me if any additional information is needed.

Sincerely,

Director
Timberline County Parks Department

b. Sample Construction Information

MYTHICAL PARK
PROJECT NO. 84-59001
SPECIFICATIONS

RIP RAP OF CREEK

1. The creek will be graded back to a 1:1 slope from the end of Ten Cent Gulch to the park boundary (about 120'). Excess soil will be used to straighten the bank a little, and fill in a couple of holes in the bank. Existing bushes and vines will not be disturbed if possible.

2. A base course of 24" diameter boulders will be placed in a trench by the side of the stream bed, and a layer of 12" diameter boulders will be placed up the bank. (In most places, this will be 4' to 6').

3. We will try to interlock the boulders, and will fill in the chinks and voids with rocks, sand, and/or gravel. Hopefully, we will get enough soil in the voids that the vines and brambles will grow back.

4. The county building inspector along with the sheriff will oversee the construction of the rip rap by using volunteers from the Rattler Conservation Camp.

SIDEWALKS

1. The existing gravel walk shall be excavated and graded to a finished depth of 4" below the top of the existing concrete curb.

2. Trees in the existing walkway shall be formed around, as directed by the inspector.

3. Walk shall be constructed to the county's sidewalk standard.

4. The new walk will be about 4 1/2" wide, except that where it has to go around a tree, it will be at least 36" wide on one side of the tree, and not less than 24" wide on the other side.

5. The walks will be constructed by county crews, and the project cost is less than our bid requirements.

PAVED PARKING

1. The existing graveled parking area shall be graded, watered, and rolled to a uniformly level surface.

2. Two inches of asphaltic concrete shall be placed by machine, and rolled to a finished depth of one and one-half inches.

3. The finished surface shall be sealed with an emulsified liquid asphalt seal coat.

4. All work will be done to county standards by the company that has the county road contract for this year. See the attached contract.

5. The two existing disabled parking stalls (marked with blue curb) will remain. We will paint the HC "chair" symbol on each stall. The disabled stalls will be 9' wide with a 5' wide area between them, painted with diagonal stripes to mark the ramp location. (There are a total of 11 spaces, so this is one more disabled stall than required by code.)

FENCE

1. About 135' of split rail fence shall be constructed along the west half of the south side of the park.

2. Posts shall be placed ten feet apart. Rails shall be selected for their stacking ability, and shall be stacked six rails high - forming a fence approximately three and one-half feet high.

3. Posts shall be prefabricated in pairs by placing a 4" by 4" x 24" redwood block between two posts six feet long, and wiring them together with No. 9 galvanized wire.

4. A 4' wide gate built out of rail and hung off of heavy galvanized hinges will be located as shown the on plan. (It will be just like the gate by the playground.)

5. The project will be supervised by the county Engineering Department and carried out by the Timberline County Chapter of the "Senior Gleaners".

MATTING FOR PLAYGROUND

1. County crews will remove existing sand from under all play areas.

2. Perot Petroleum, as a demonstration project for their new "J-12 Instant Surface", will provide four and one half inches of poured matting under all our existing play equipment, which will be disabled accessible, and provide cushioning as required by the Consumer Product Safety Council (CPSC). We will pay for materials only. The labor is donated. Please read the attached specification sheet. The playground was built in 1991, and meets all CPSC Guideline. We will not have to move any equipment to provide the required safety clearances.

3. Disabled access to the matting surface is provided by a 48" wide concrete walk run to the play area, and will be flush with the finished surface of the matting.

c. Sample Cost Estimate

1.	BOULDER RIP RAP. Approximately 600 sq. ft.	$3,200.00
2.	SIDEWALK. Approximately 610 sq. ft.	$1,628.00
3.	RAIL FENCE. Labor, grading, gravel.	$530.00
4.	PARKING LOT PAVING. Approximately 3,500 sq. ft. A.C.	$7,100.00
5.	MATTING FOR PLAY AREA. Approximately 960 sq. ft.	$7,042.00
6.	ENGINEERING, SUPERVISION AND MISC. LABOR.	$500.00
	Total Project Costs	$20,000.00

d. A sample plan for Mythical Park is shown on the next page.

ATTACHMENT G

Mythical Park Plan

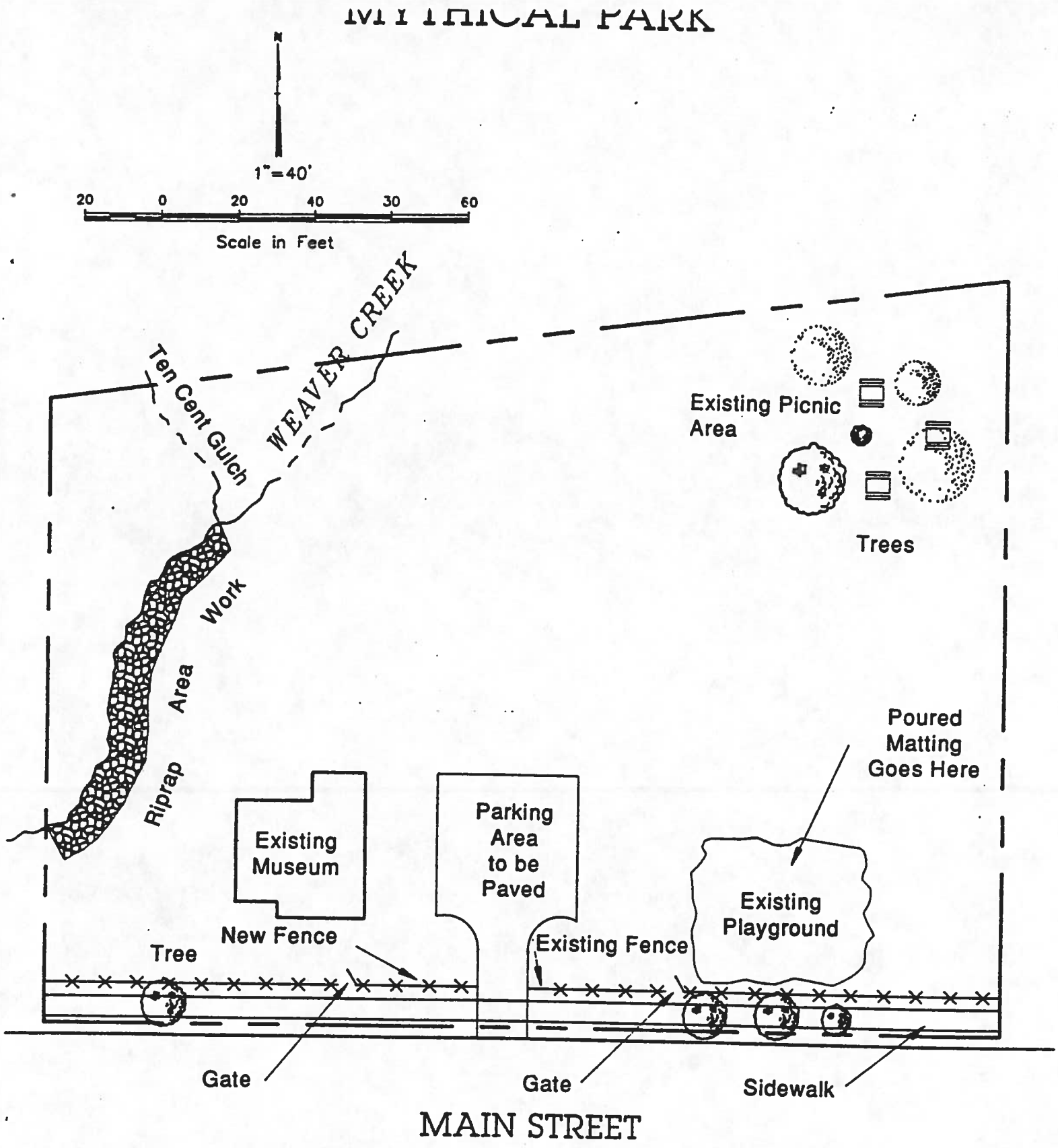

Project Name: _____ Signature: _____

Applicant: _____ D-10 Date: _____

ATTACHMENT H

DISABLED ACCESS DRAWINGS

RESTROOM DOORS

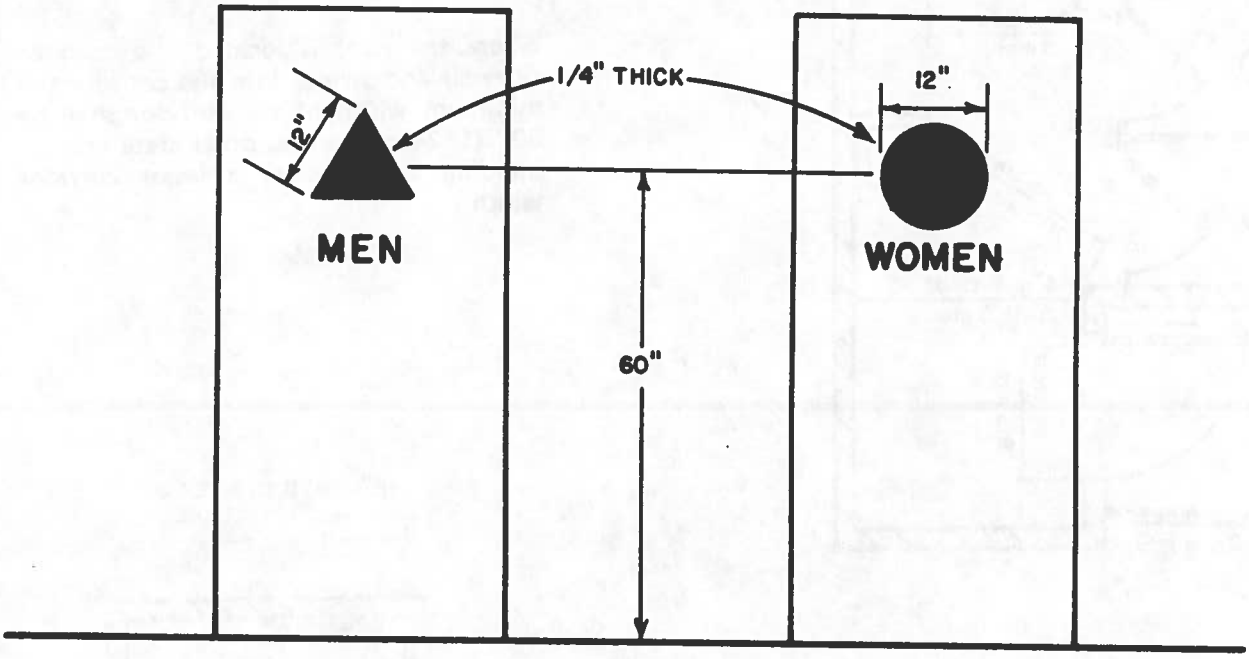

Part 2, Title 24, C.A.C. Section 2-1711, (e).3.

"On doorways leading to men's sanitary facilities, an equilateral triangle 1/4 inch (6.35mm) thick with edges 12 inches (304.8mm) and a vertex pointing upward and on women's sanitary facilities a circle 1/4 inch (6.35mm) thick and 12 inches (304.8mm) in diameter. These geometric symbols shall be centered on the door at a height of 60 inches (1524mm) and their color and contrast shall be distinctly different from the color and contrast of the door."

NEW RESTROOMS

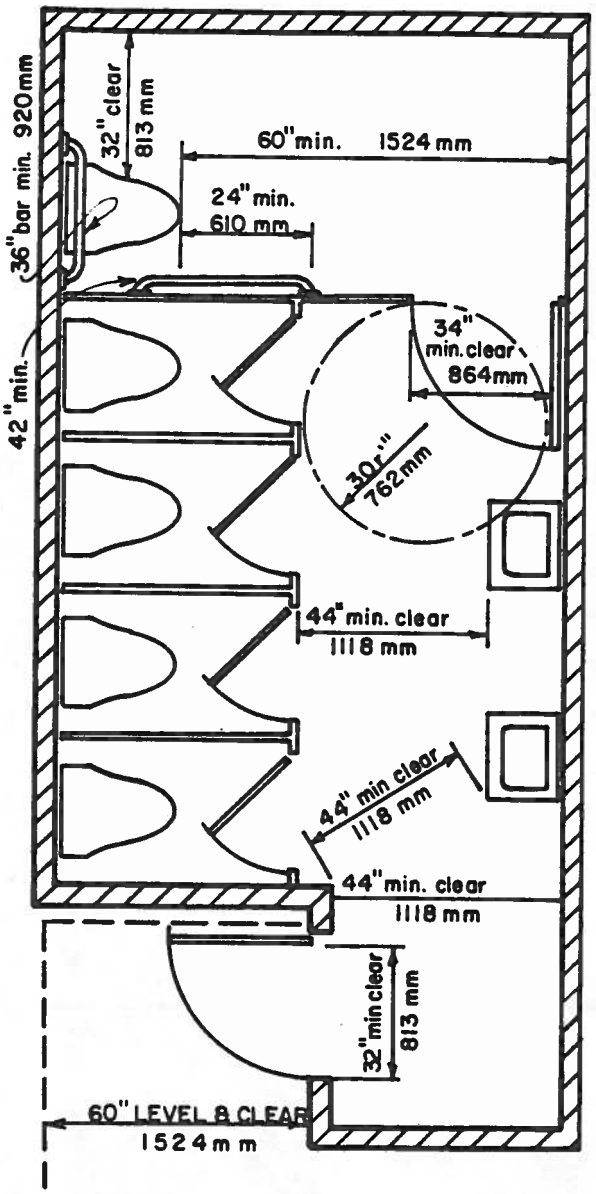

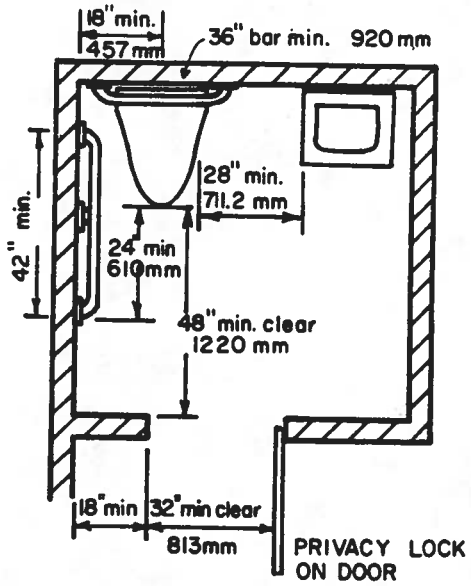

Privacy Toilet

Where the door is located in a corridor sidewall and swings into the corridor the minimum width of the corridor shall be 60" (1524mm) unless other state or local building codes allow a lesser corridor width.

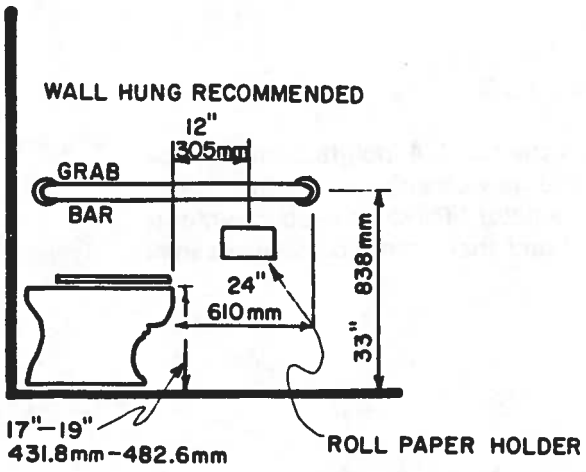

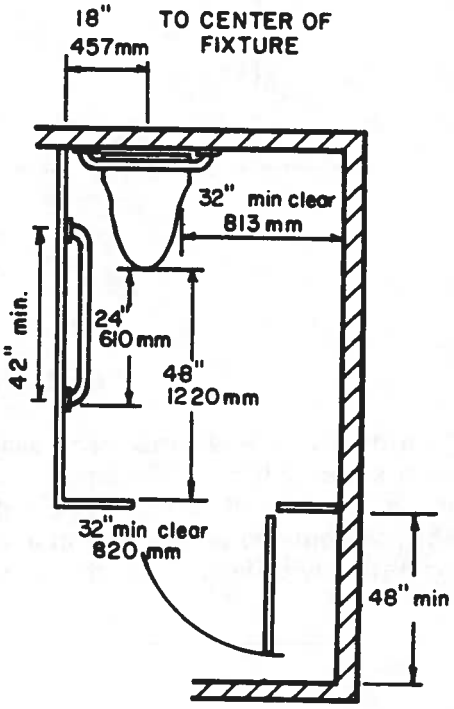

SHOWERS

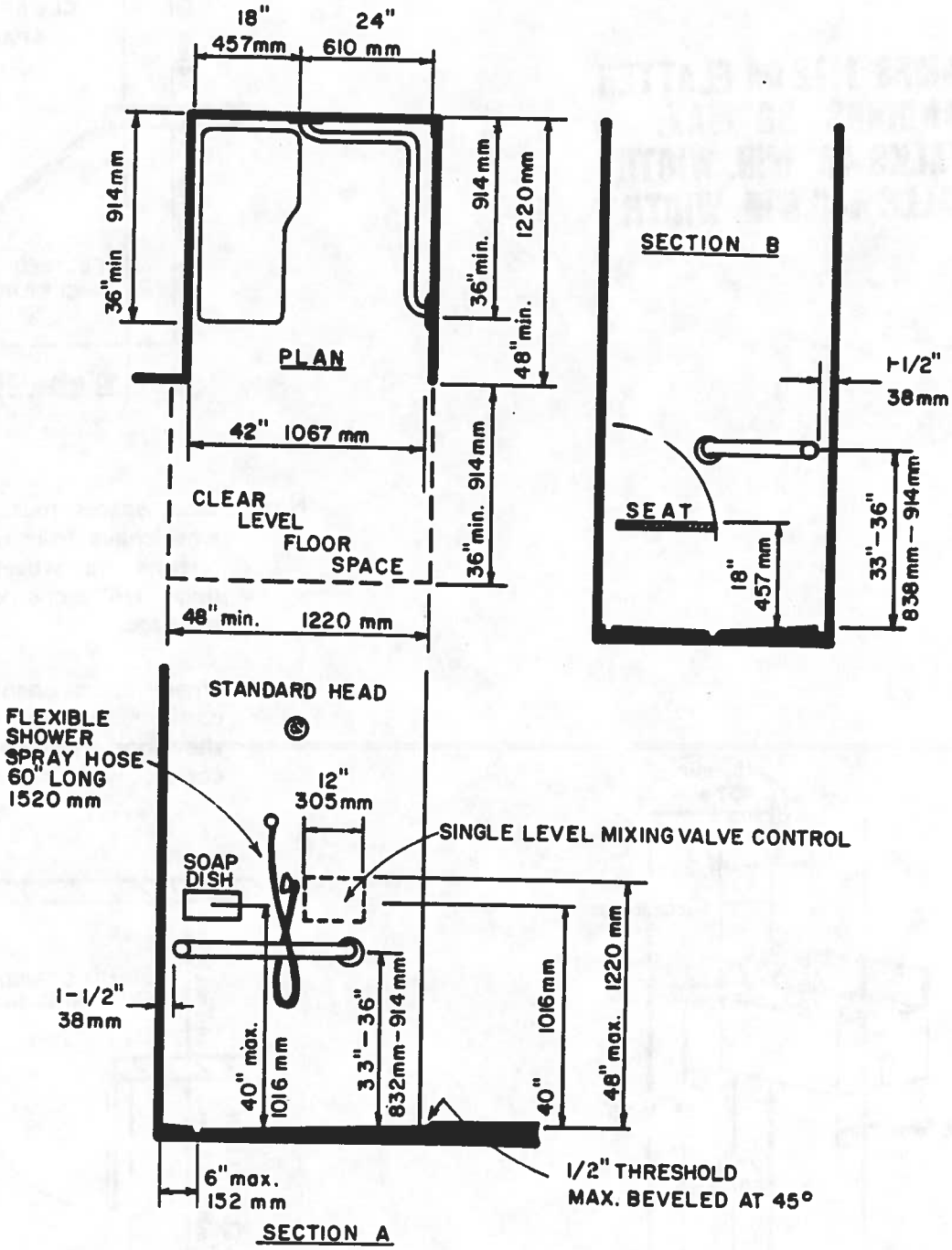

IN AREAS OF VANDALISM, use two wall mounted shower heads, one at 40 inches and one at the standard height. Each head must be able to swivel horizontally and vertically. Each one shall be controlled independently.

RAMPS 1:12 OR FLATTER
LANDINGS 30' MAX.
WALKS 48" MIN. WIDTH
HALLS 44" MIN. WIDTH

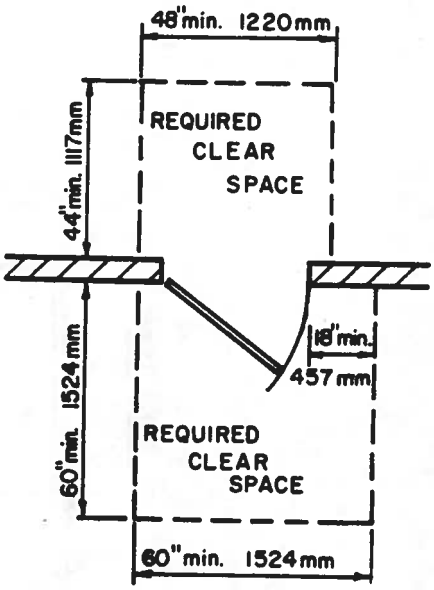

Note: Clear spaces must be level to preve wheelchairs from rolling when occupa releases the wheel grips to reach f door, 1/4" slope per foot is allowed f drainage.

Note: Where doors open onto, but not in corridor, the required level floor beyc the door may be the minimum 4 corridor width.

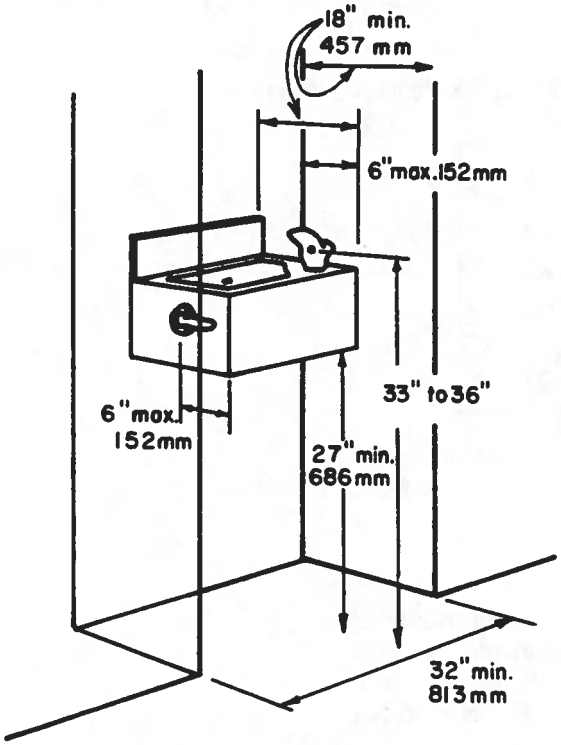

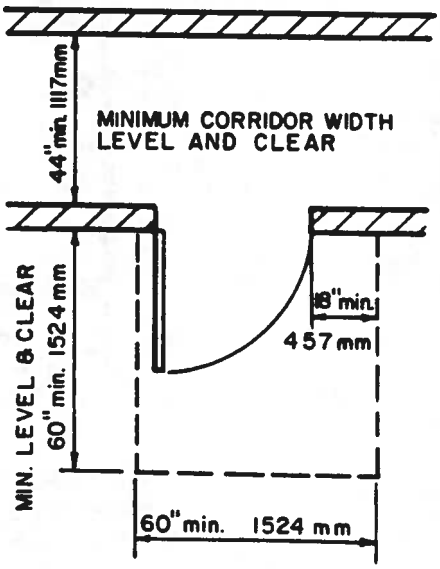

WATER FOUNTAINS

DETAILS: ALL RESTROOMS

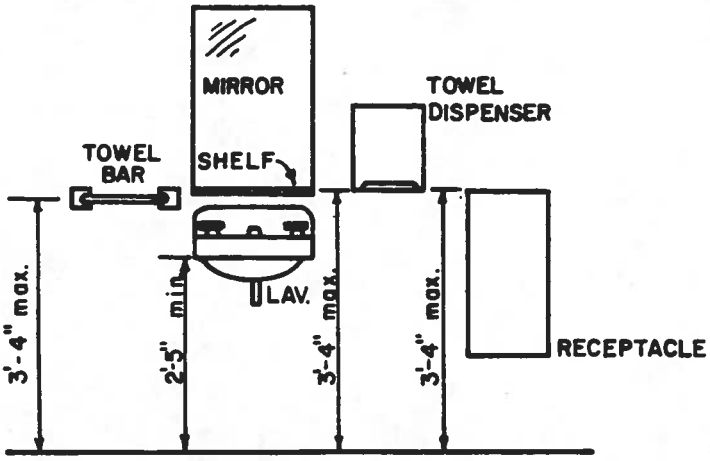

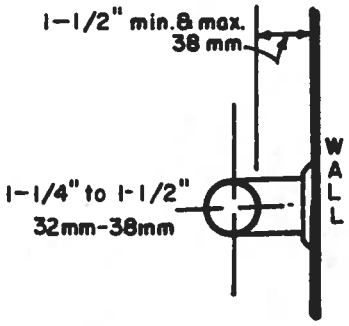

TURNAROUND SPACE

Each restroom must have a clear space measured from the floor to a height of 27" above the floor that is either 5'0" in diameter or else is a rectangle of at least 56" by 63" in size. No door may encroach into this space by more than 12" in any position.

OGALS LIBRARY COPY

Please Return

Copy 1